Installation Guide
安装说明

C^3 Toilet Seat with Bidet Functionality

C^3 清舒宝智能座便盖

K-4737T
K-4753T
K-4772T

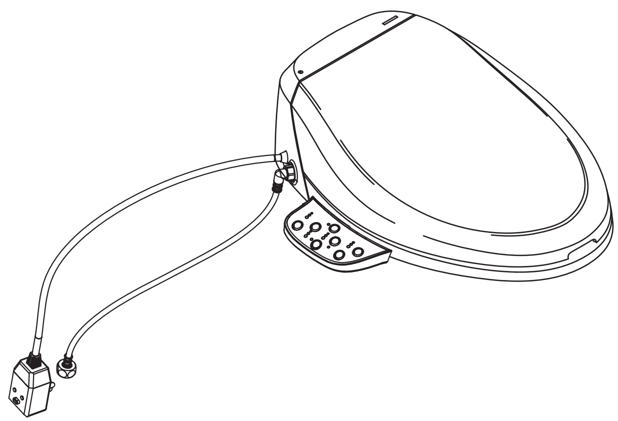

上海科勒电子科技有限公司
上海市浦东新区金滇路18号E幢 邮编：201206

English page 1-8
中文 页码 9-14

1087818-T01-E

KOHLER®

Thank You For Choosing Kohler Company

We appreciate your commitment to Kohler quality. Please take a few minutes to review this manual before you start installation. If you encounter any installation or performance problems, please don't hesitate to contact us. Our phone numbers and address are listed on the last page. Thanks again for choosing Kohler Company.

Tools and Materials

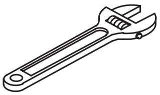

Adjustable Wrench

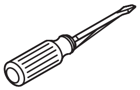

Blade Screwdriver

Before You Begin

WARNING: Risk of electric shock, fire, or personal injury. This product must be grounded. Connect only to a dedicated 220-240VAC, 50/60 Hz, 16A circuit protected by Ground-Fault Circuit-Interrupter (GFCI) or Earth-Leakage Circuit-Breaker (ELCB).

WARNING: Risk of electric shock or product damage. Do not immerse or flush the product with water.

IMPORTANT! Risk of product damage. Do not plug in the seat until all other installation steps have been completed.

IMPORTANT! Risk of product damage. Do not install this seat in a location where water might be splashed on the product.

IMPORTANT! Risk of product damage. Do not install this seat in a location exposed to excessive moisture where condensation might form on the product surface. Please ensure sufficient ventilation in your surroundings to prevent possible damage to electronic components.

Before You Begin (cont.)

IMPORTANT! Risk of product or property damage. Pushing or pulling on the water connection may cause water leakage.

IMPORTANT! Risk of product damage. Do not apply excessive force to the spray wands. Product may break.

IMPORTANT! Risk of product damage.
Take care to face right in position to the thread while connecting seat inlet pipe, otherwise, the inlet pipe thread may wear off and lead to water leakage.

- ☐ Observe all local plumbing and building codes.
- ☐ All information in these instructions is based on the latest product information available at the time of publication. Kohler Co. reserves the right to make changes at any time without notice.
- ☐ Do not use an extension cord with the product.
- ☐ Connect to a cold water supply with a pressure of 0.7~7.5kgf/cm^2 (0.07~0.74MPa).
- ☐ Connect only to a cold water supply line carrying direct tap water.
- ☐ Unplug the seat and drain the seat if the functions of the seat will not be operated for an extended period of time.

1. Match toilet roughing-in requirement and installation tips

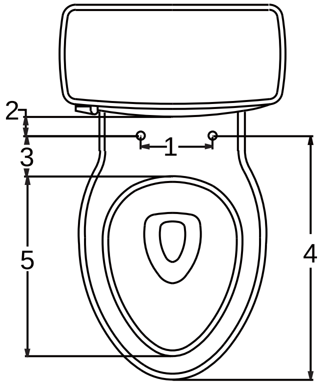

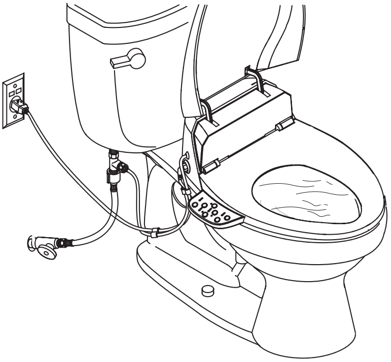

1 Distance between installation holes:136-140mm

2 Distance between instalaltion holes and tank front rim:>20mm

3 Distance between instalaltion holes and bowl inner rim:＜70mm

4 Distance between installation holes and tank top rim:460-490mm

5 Bowl inner diameter:370-390mm

6 Reserve place around 1 meter away from the toilet before installation

2. Install an Electrical Outlet

⚠ **WARNING: Risk of electric shock, fire, or personal injury.** This product must be grounded. Connect only to a dedicated 220-240 VAC, 50/60 Hz, 16A circuit protected by Ground-Fault Circuit-Interrupter (GFCI) or Earth-Leakage Circuit-Breaker (ELCB).

□ It is recommended to use water-resistant socket.Do not use an extension code with the product.

NOTE: Follow local codes when determining the electrical outlet Location.

□ Route the electrical and install to a 220-240 V GFCI- or ELCB-protected receptacle.

3. Preparation

□ Remove the existing toilet seat.

□ Turn off the water supply to the toilet.

□ Flush the toilet to relieve any pressure from the water supply hoses.

□ Position a container under the fill valve to catch any excess water.

□ Disconnect the water supply hose from the toilet fill valve.

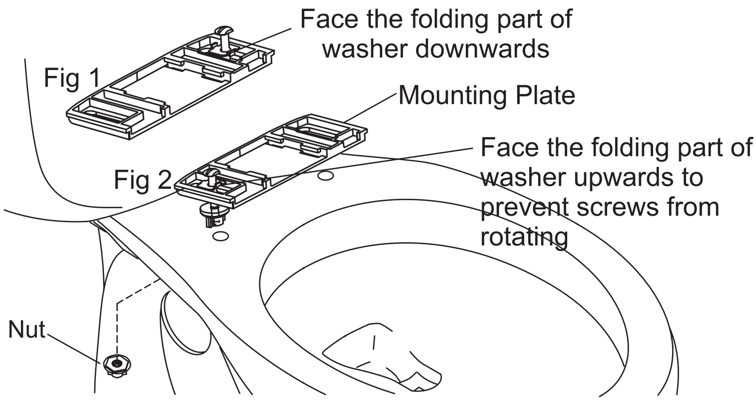

4. Install the Mounting Plate

☐ Position the mounting plate over the toilet mounting holes.

☐ Slide a washer onto each of the bolts.

NOTE: Some toilets come with threaded inserts pre-installed in the mounting holes. For toilets with threaded inserts, the nut is not required.

For Toilets with Threaded Inserts (Fig 1):

☐ Insert a bolt through the mounting plate and position the washers so they rest in the grooves of the mounting plates. Please pay attention to washer direction.

☐ Loosely thread the bolts into the inserts. Do not overtighten for future adjustment.

For All Other Installations (Fig 2):

☐ Position the mounting plate over the toilet mounting holes.

☐ Slide a washer onto each of the bolts. Please pay attention to washer direction.

☐ Insert a bolt through the mounting plate and the toilet mounting holes.

☐ Position the washers so they rest in the grooves of the mounting plate.

☐ Thread a nut onto each of the bolts. Handtighten the nut.

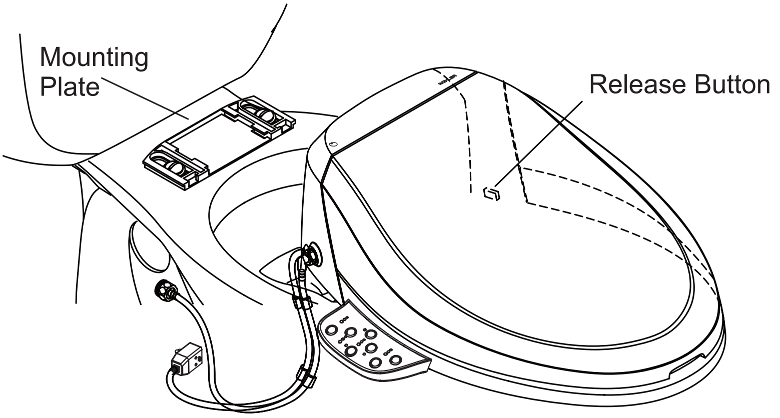

5. Install the Seat

☐ Align the slot on the mounting plate with the groove located below the toilet seal, slide the seat onto the mounting plate until you feel it snap into place.

NOTE: The mounting plate may need to be adjusted to properly align the seat.

For Toilets with Threaded Inserts:

☐ To adjust the seat position, remove the seat(see Homeowners Guide) and reposition the mounting plate as needed.

☐ Reinstall the seat. Repeat the adjustment procedure as needed until seat is properly aligned.

☐ Once the seat is positioned as desired, remove the seat and securely tighten down the mounting plate.

☐ Reinstall the seat.

For All Other Installations:

☐ No need to remove the seat for seat position adjustment, as show in Fig 2. Adjust the position seat and mounting plate only by loosening nuts and tighten nuts when they are adjusted to properly align the seat. No worry screws will follow the turning.

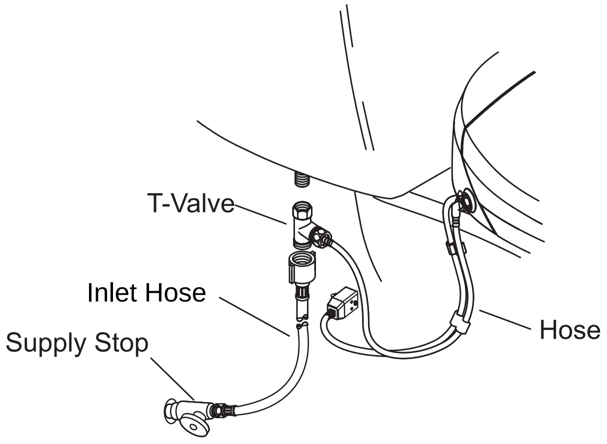

6. Connect the Water Supply

IMPORTANT! Risk of product damage. Take care to face right in position to the inlet pipe thread and seat thread. Take care not to crossthread or overtighten connections. Hand tighten plus one-quarter turn is sufficient for tightening.

IMPORTANT! Risk of product damage. Use care not to scratch the product surfaces.

- ☐ Connect the T-valve directly to the toilet fill valve.

  NOTE! For those newly installed plumbing pipes, before the inlet hose connected to T-valve, must flush for several seconds to clean the inner side of the pipe, in order to remove the dirt and debris etc.

- ☐ Connect the T-valve to the toilet seat with the supplied hose.
- ☐ Connect the water supply to the T-valve.
- ☐ Turn on the water supply.
- ☐ Check all connections for leaks and make any adjustments as needed.

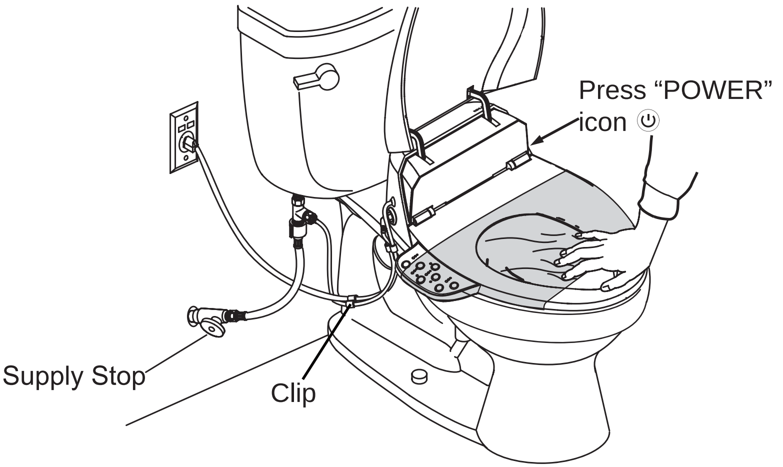

7. Installation Checkout

- ☐ Wrap the toilet seat with plastic wrap to prevent water from spraying from the toilet during testing.

- ☐ Plug in the power cord and press the power button located at the right side of the seat while top indicator starts to flash. Then the tank begins water filling action. The indicator stops flashing to indicate the water filling action is completed.

- ☐ Attach the clips evenly along the hose and power cord.

- ☐ The seat is activated by skin-to-seat contact. Unless otherwise stated, the seat must be occupied to activate the functions. To activate the seat controls for testing purposes, when facing the toilet, place your hand or a damp wash cloth on the right side of the seat approximately 1/3 from the front of the seat (senor area).

- ☐ Proceed to the "Operation" section of the Homeowners Guide to test the various seat functions.

谢谢您选择科勒公司

我们感谢您对科勒质量的信任。在您开始安装前，请您花几分钟时间阅读这本手册。如果您在安装或性能方面遇到任何问题，务必请您与我们联系。我们的电话和地址列在手册底页。再次感谢您选择科勒公司。

工具和材料

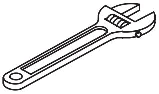

可调节扳手

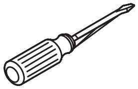

一字螺丝刀

安装之前

警告：触电，火灾，或人身伤害的危险。本产品必须接地良好。只能连接到专用的220-240V，50/60 Hz，16A的带接地故障断路器或接地漏电保护器的电路中。

警告：触电或产品损伤的危险。不要把产品浸没在水中。

重要！产品损伤的危险。在所有其他安装步骤结束之前不要插电源线插头。

重要！产品损伤的危险。不要把产品安装在水可能溅到的地方。

重要！产品损伤的危险。不要把产品安装在过分潮湿的地方，在这种地方，水汽可能凝聚在产品表面。请始终保持使用环境有足够的通风，以防止电子组件的损坏。

重要！产品损坏或财产损失的危险。硬推硬拉水管接口可能造成水的渗漏。

重要！产品损坏的危险。不要在喷嘴上施加过大的力，否则产品可能损坏。

重要！产品损坏的危险。连接本产品进水管时要小心对正螺纹，否则会损坏产品进水口螺纹，造成漏水。

□ 遵守所有当地的管道和建筑标准。

□ 这本说明中所有的信息基于最新公开的产品信息。科勒公司保留在任何时间不通知的情况下做改变的权利。

□ 不要使用延长电线连接产品。

□ 连接到水压在0.7kgf/cm^2 ~7.5kgf/cm^2 (0.07MPa~0.74MPa)的冷水源。

□ 只能连接到自来水的水源。

□ 如果座圈长时间不用，请拔下插头并排干本机里的水。

1. 适配座便盖尺寸要求及安装小贴示

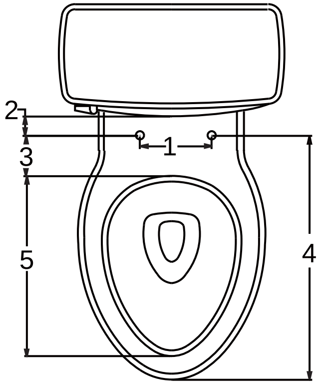

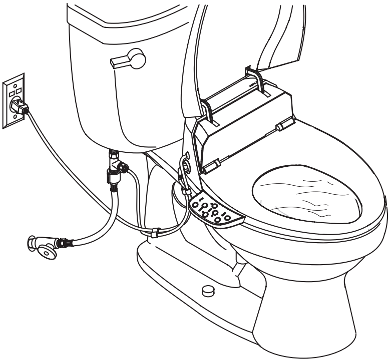

1 安装孔的间距：136-140mm

2 安装孔与水箱的距离:＞20mm

3 安装孔与座便器内圈的距离:＜70mm

4 安装孔到座便器顶端的距离：460-490mm

5 座便器内径尺寸：370-390mm

6 安装前请在座便器左侧约1米范围内预留电源插座

2. 安装电路出口

警告：触电，火灾或人身伤害的危险。本产品必须良好接地。只能连接到专用的220-240V，50/60 Hz，16A带接地故障断路器或接地漏电保护器的电路中。

- □ 建议使用防水型插座，不要使用延长电线连接产品。

注意：在决定电路出口位置时，要按照当地的标准。

- □ 连接到220-240V并带有接地故障断路器和接地漏电保护器保护的电路中。

3. 准备

- □ 移除现有的座圈。
- □ 关闭座便器的供水系统。
- □ 冲洗座便器，释放来自供水管的压力。
- □ 在进水阀下方放置一个容器装多余的水。
- □ 断开座便器进水阀与供水管的连接。

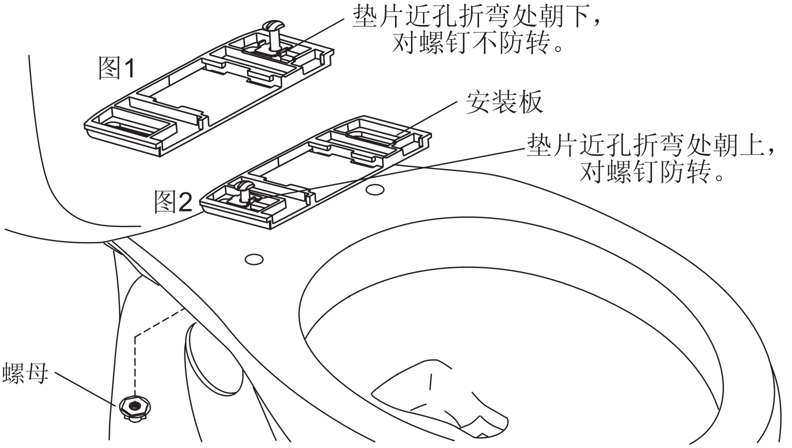

4. 安装安装板

□ 在座便器安装孔上方放置安装板。

□ 把螺丝分别插入垫圈内。

注意：一些座便器的底板孔内已经有螺丝。这种座便器不需要螺母。

对有螺纹孔的座便器(安装如图1所示):

□ 把螺丝插入安装板和座便器安装孔内，移动垫圈，使之卡在安装板的凹槽内，注意垫片方向：垫片近孔折弯处向下。

□ 顺着螺纹轻轻地拧紧螺丝，不要拧得过紧，以便调整。

对其他座便器(安装如图2所示):

□ 在座便器安装孔上方放置安装板。

□ 把每个螺丝分别插入垫圈内，注意垫片方向：垫片近孔折弯处向上。

□ 把螺丝插入安装板和座便器的安装孔内。

□ 移动垫圈，使之置于安装板的凹槽内。

□ 在每个螺丝上拧上螺母，用手拧紧螺母。

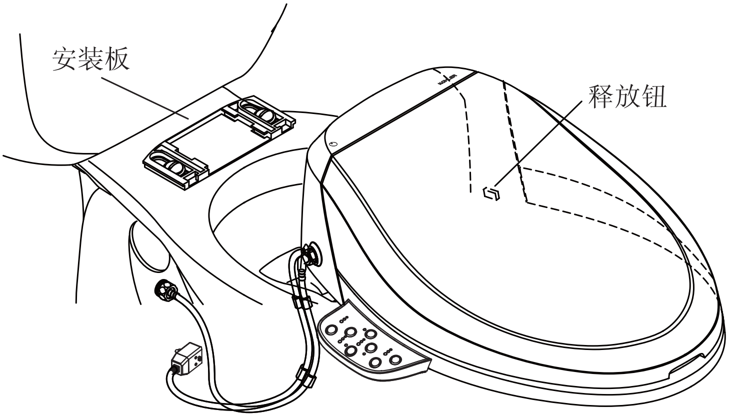

5. 安装座圈

□ 对正座圈底部和安装板之间的卡槽，把座圈在座便器座圈面上向水箱方向移动，当听到咔嚓声说明安装完成。

注意：安装板可能需要调节来完全地对准座便器相对位置。

对有螺纹孔的座便器:

□ 要调节座圈位置，如有必要可以移除座圈(见用户手册)，重新调节安装板的位置。

□ 重新安装座圈。如有必要重复调节的步骤直到座圈安装恰当。

□ 一旦座圈位置确定，移除座圈，牢固的拧紧安装板。

□ 重新安装座圈。

对其它座便器:

□ 要调节座圈位置，不需移除座圈，如图2所示，只需拧松螺母，即可摆动调节座圈及安装板的位置，当位置适当，直接拧紧螺母即可，不必担心螺钉会跟转。

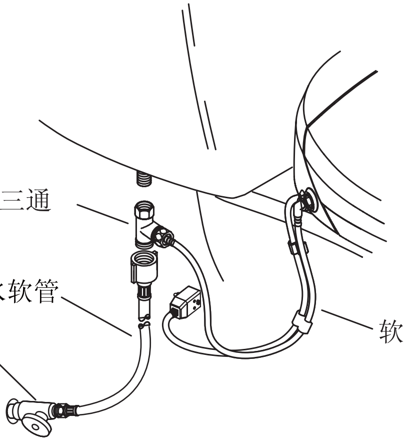

6. 连接供水系统

重要！产品损坏的危险。小心对正进水管与座圈的螺纹，不要破坏螺纹或过于拧紧接头。为了牢固的拧紧接头，用手拧紧后用工具再拧紧1/4圈。

重要！产品损坏的危险。小心不要刮伤产品表面。

□ 直接将三通与座便器进水管口相连。

注意！对新安装的管路系统，在将进水软管连接至三通以前，须直接排水数秒，以清除管道内沙石、污垢等。

□ 用提供的软管连接三通和座圈。

□ 把三通与供水系统相连。

□ 打开供水系统。

□ 检查所有连接是否有漏水，如果需要可做调整。

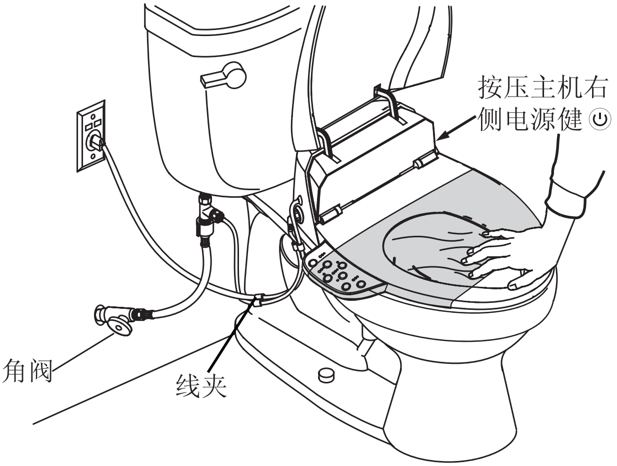

7. 安装检验

□ 用塑料布包裹在座圈上，防止测试时水喷出。

□ 把电源线插上电源插座，按压右侧电源键，顶部指示灯开始闪烁，进入水箱注水状态。水箱注水完成后，指示灯停止闪烁。

□ 在软管和电源线间扣上线夹。

□ 座圈设计为有落坐感应启动工作。为了激活座圈达到测试的目的，首先面对座便器，然后把手或者一块湿布放在座圈右边离前端大约三分之一处(感应区域)。

□ 继续参考用户手册中的“使用方法”部分来测试产品的不同功能。